fiac
MADE IN ITALY
AIR COMPRESSORS
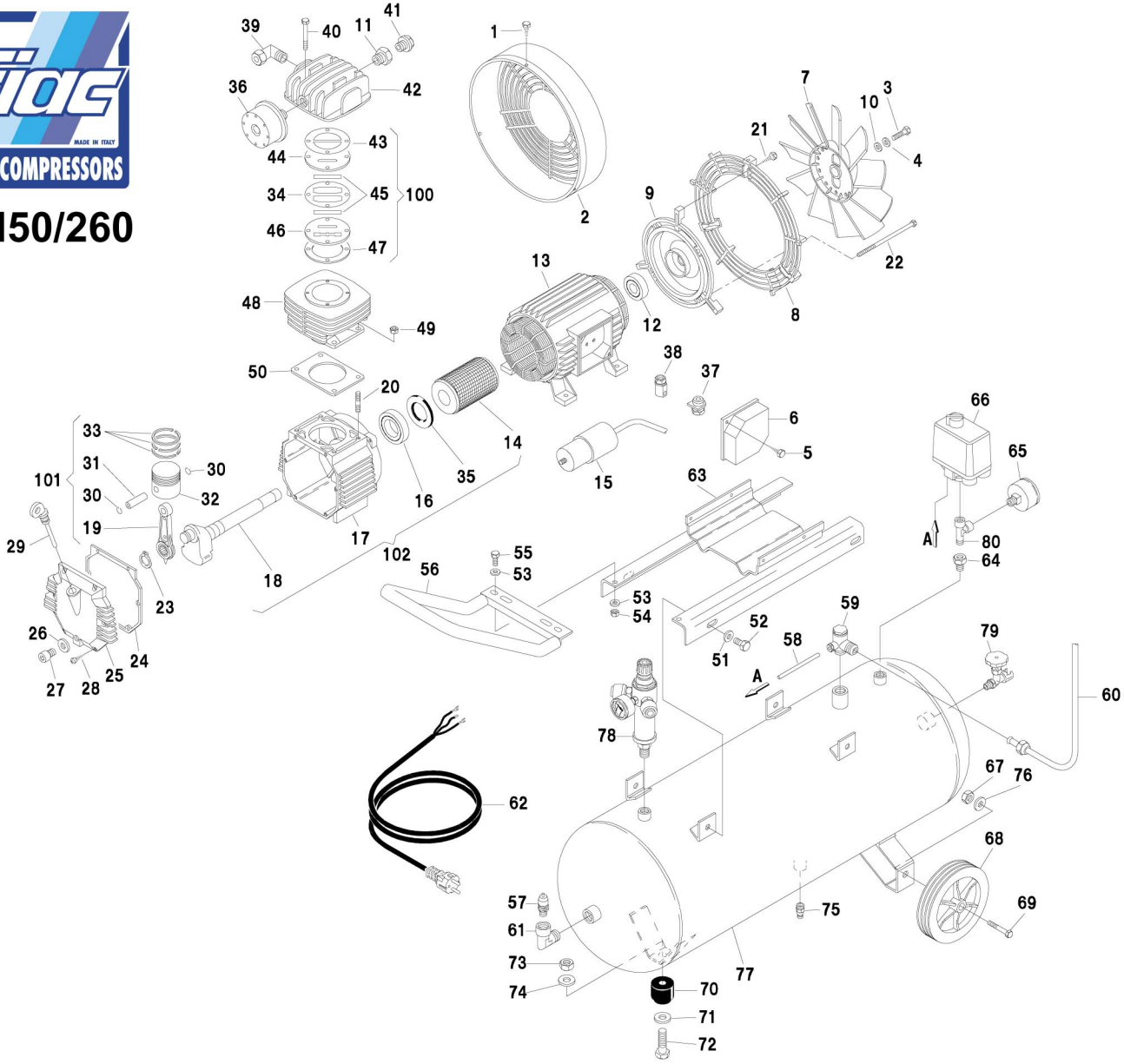
GM50/260